The DTV Conversion – Making Things Work and Solving Problems

CCBE 2011

MICRONETIXX COMMUNICATIONS

We are going to look at a number of DTV transmission projects that worked well, and others that did not work well.

We will also look at some theory and practice to get the best performance from transmitting antennas. Sometimes seemingly small things can make a big difference in the coverage a given antenna can provide.

The first project is to replace a failing channel 13 helical antenna.

MICRONETIXX COMMUNICATIONS

Close up of the antenna Pylon

MICRONETIXX
COMMUNICATIONS

The closer you get the worse it looks.
Anyone for a climb up ?

MICRONETIXX
COMMUNICATIONS

Top section of tower and bottom bury cup. Note new rebar ladder.

MICRONETIXX COMMUNICATIONS

The new antenna (long gray radome) is center fed. The idea here is to use top half of the new antenna while the old antenna pylon is taken down and a new monopole and top tower section are installed.

MICRONETIXX COMMUNICATIONS

The tower complex for the TV, FM and telephone company relays.

In the red oval is half of the new channel 13 antenna, mounted on the new monopole. The new antenna is elliptically polarized. For best performance we want the Fresnel zone to be clear. We will discuss this a few slides later.

MICRONETIXX COMMUNICATIONS

A closer look at top half (three bays) of the channel 13 antenna mounted on the new pylon. The bottom half of the antenna laid on the ground for more than a year and was saturated with water from the frequent heavy rains. The bottom half was repaired and installed after the picture was taken.

MICRONETIXX COMMUNICATIONS

Fresnel Zone

If unobstructed, radio waves will travel in a straight line from the transmitting antenna to the receiver. If there are obstacles in or near the path, the radio waves reflecting off those objects may arrive out of phase with the signals that travel unobstructed and cause a reduction in received signal level. The reflected signal can also arrive in phase and increase the signal level at a given point.

While we can not get rid of obstructions out in the service area, we can take steps to optimize the Fresnel zone clearance of the transmitting antenna where it's mounted.

MICRONETIXX
COMMUNICATIONS

The Fresnel Zone

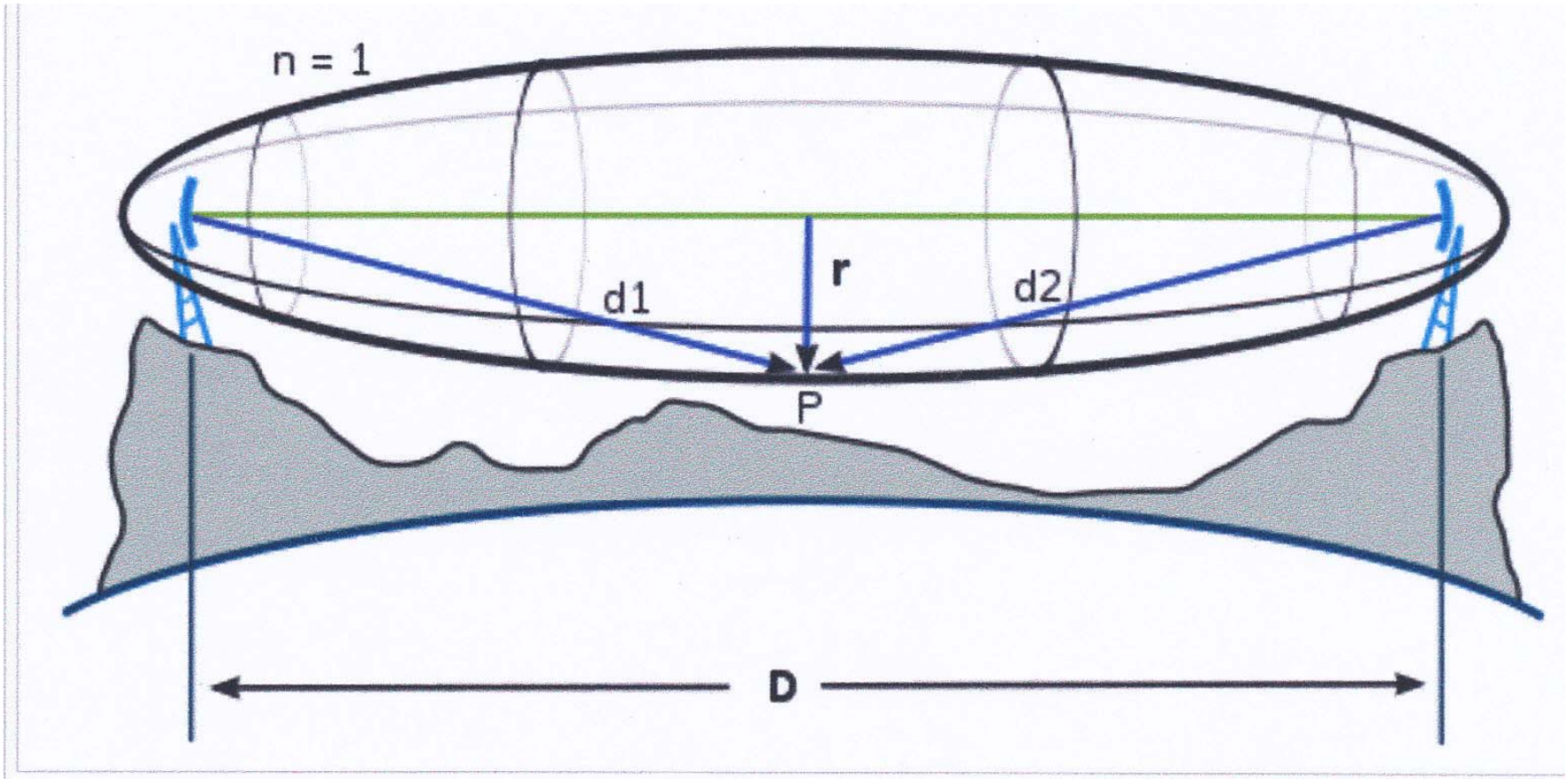

Fresnel zone: *D* is the distance between the transmitter and the receiver; *r* is the radius of the first Fresnel zone (n=1) at point P. P is d1 away from the transmitter, and d2 away from the receiver.

Courtesy of Wikipedia

MICRONETIXX COMMUNICATIONS

The Fresnel Zone

There are three major types of obstructions to the Fresnel zone:

- Fixed Reflections from the ground
- Reflections from obstacles from objects such as building and terrain
- Dynamic reflections from moving objects such as vehicles and airplanes

MICRONETIXX COMMUNICATIONS

Question:

Typically the farther away from the antenna you get, the weaker the signal gets ?

No

Yes

MICRONETIXX COMMUNICATIONS

Observations

Excellent reception of this 300 Watt Station 60 miles away

V.S.W.R. very low – a 30 dB return loss from the TX line and antenna

Very poor reception 6 miles from the transmitter in the North Valley

Reception better at the studio 10 miles away, but still weak

Better reception yet at 15 to 20 miles away

Used a spectrum analyzer to record signal values. Vertical plane readings all over the place at different locations

All locations measured had clear line of sight with the transmitter

This is only a 3 bay antenna – so the main lobe should be very wide

MICRONETIXX COMMUNICATIONS

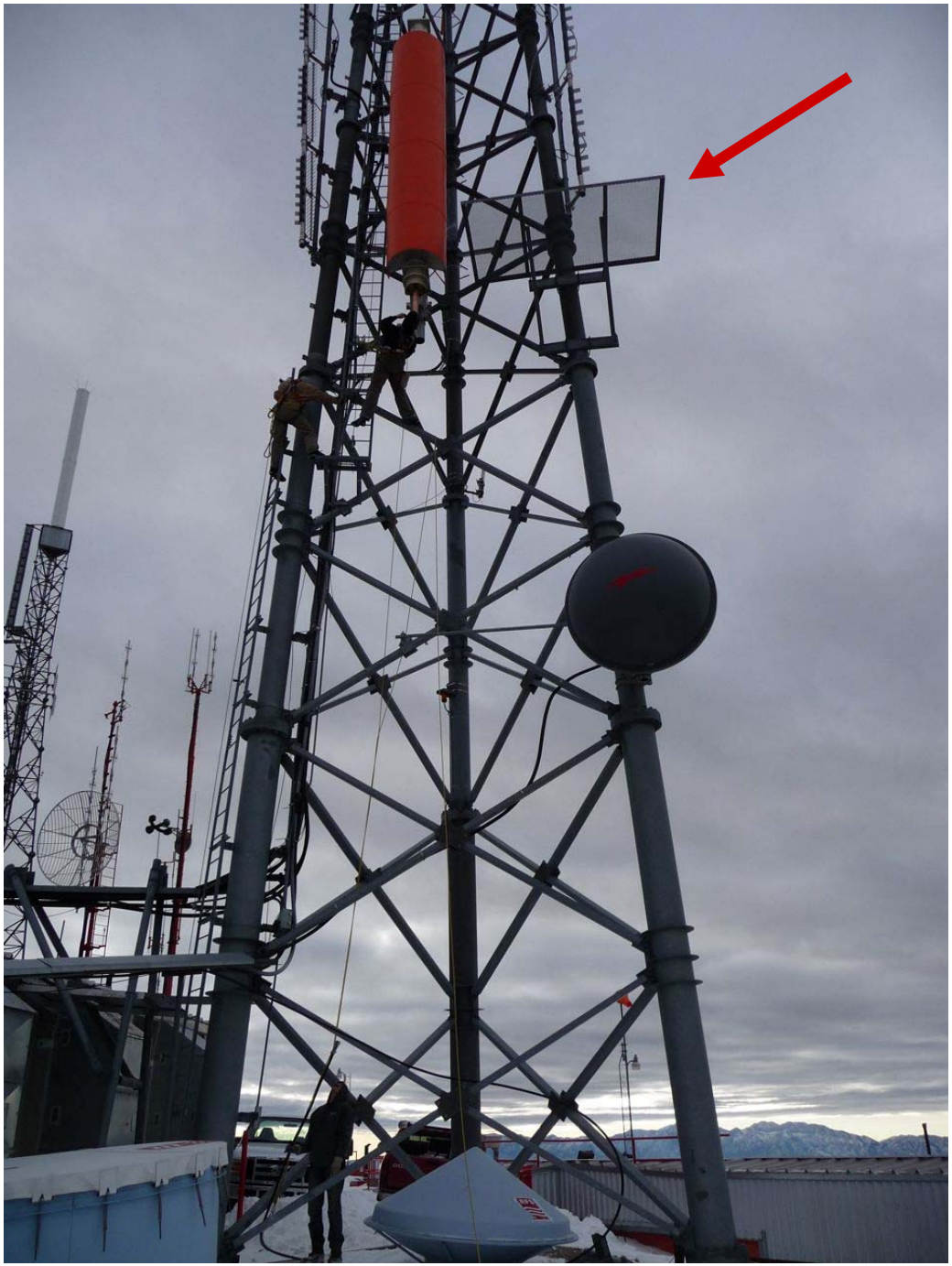

A 3 meter square ice shield mounted at the same elevation as the bottom of the antenna. Even worse – the shield is tilted upwards.

At channel 10 that's a 2 Lambda square reflector. Moving the ice shield down 3 meters increased signal strength in some close in spots by up to 15 dB.

MICRONETIXX COMMUNICATIONS

E/P and C/P antennas

When transmitting either a E/P or C/P signal it becomes more important to keep the Fresnel zone as clear as possible. Interference from nearby objects (as the ice shield in the last slide) can de-polarize a signal quickly.

On larger towers cross section towers, or office buildings, allow at least 1 Lambda of vertical clearance from the bottom element or slot. More clearance is almost always better.

The next slide shows a replacement E/P antenna on channel 8 with excellent clearance over an extended ice shield. The bottom slot is 1.5 Lambda above the ice shield.

MICRONETIXX COMMUNICATIONS

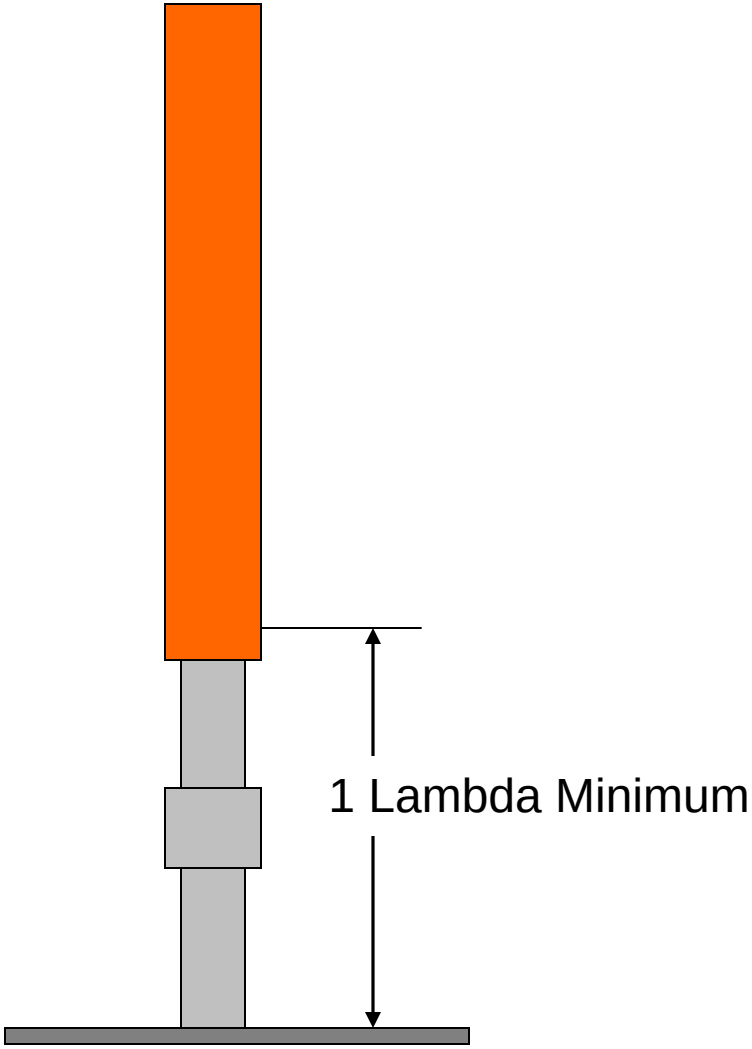

MICRONETIXX
COMMUNICATIONS

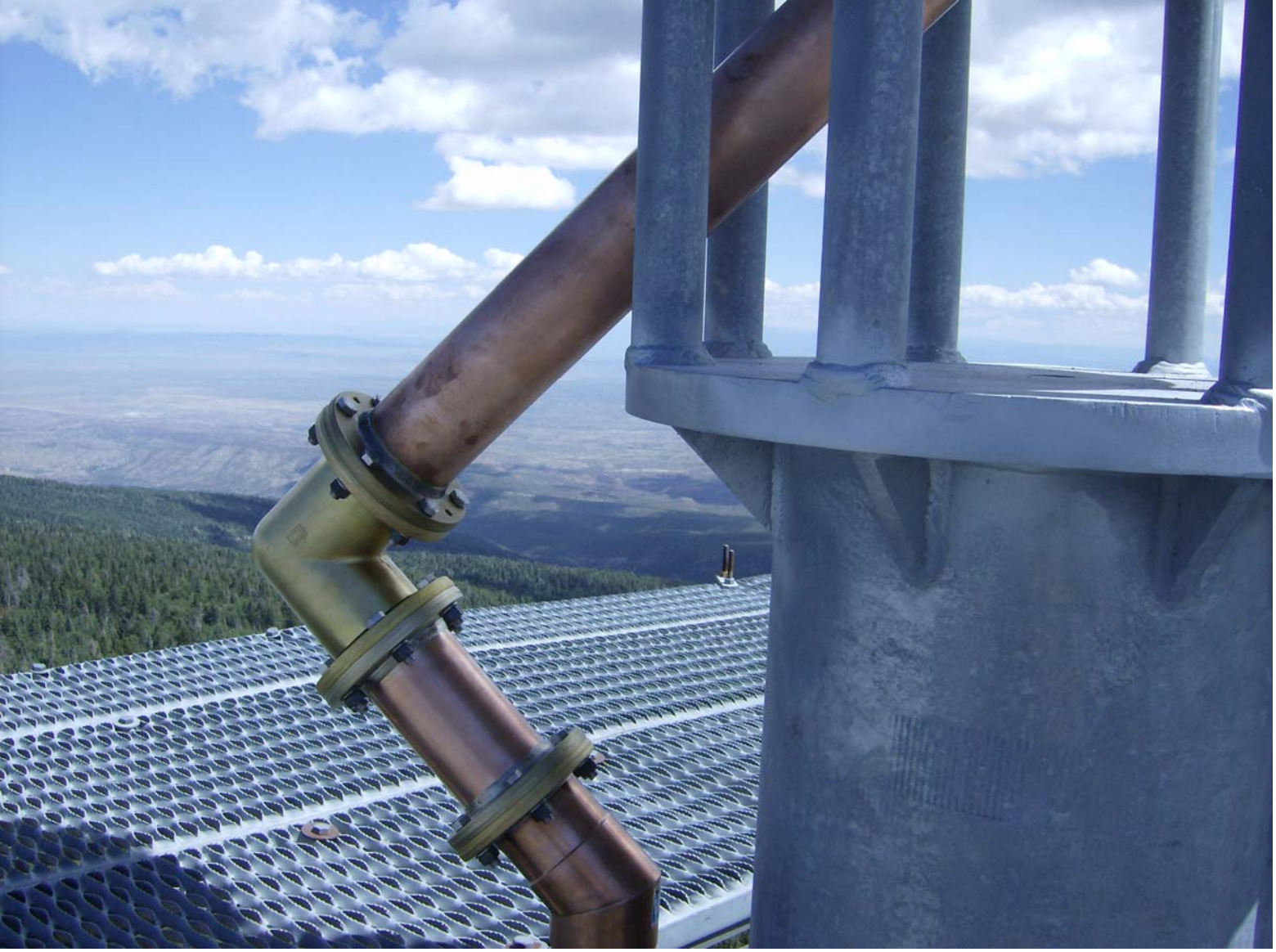

What’s Missing ?

MICRONETIXX
COMMUNICATIONS

Dual Fed Antennas

One way of providing redundancy to a antenna system is to have multiple feed points. Many types of antennas such as slot, panel, and batwing can be designed with multiple feed points. This eliminates the need later to add an auxiliary antenna.

If we use a 16 bay slot antenna as an example and break it in two, we then have two 8 bay sections fed by an external power divider in the transmitter building. This in effect creates a 16 bay center fed antenna system.

The two halves are almost the same. The upper section will have some short spaced elements to create some of the null fill and beam tilt. It will have slightly less gain than the bottom section. The top antenna will be lead phased slightly to create the remaining beam tilt. The bottom half will have no beam tilt or first null fill.

MICRONETIXX COMMUNICATIONS

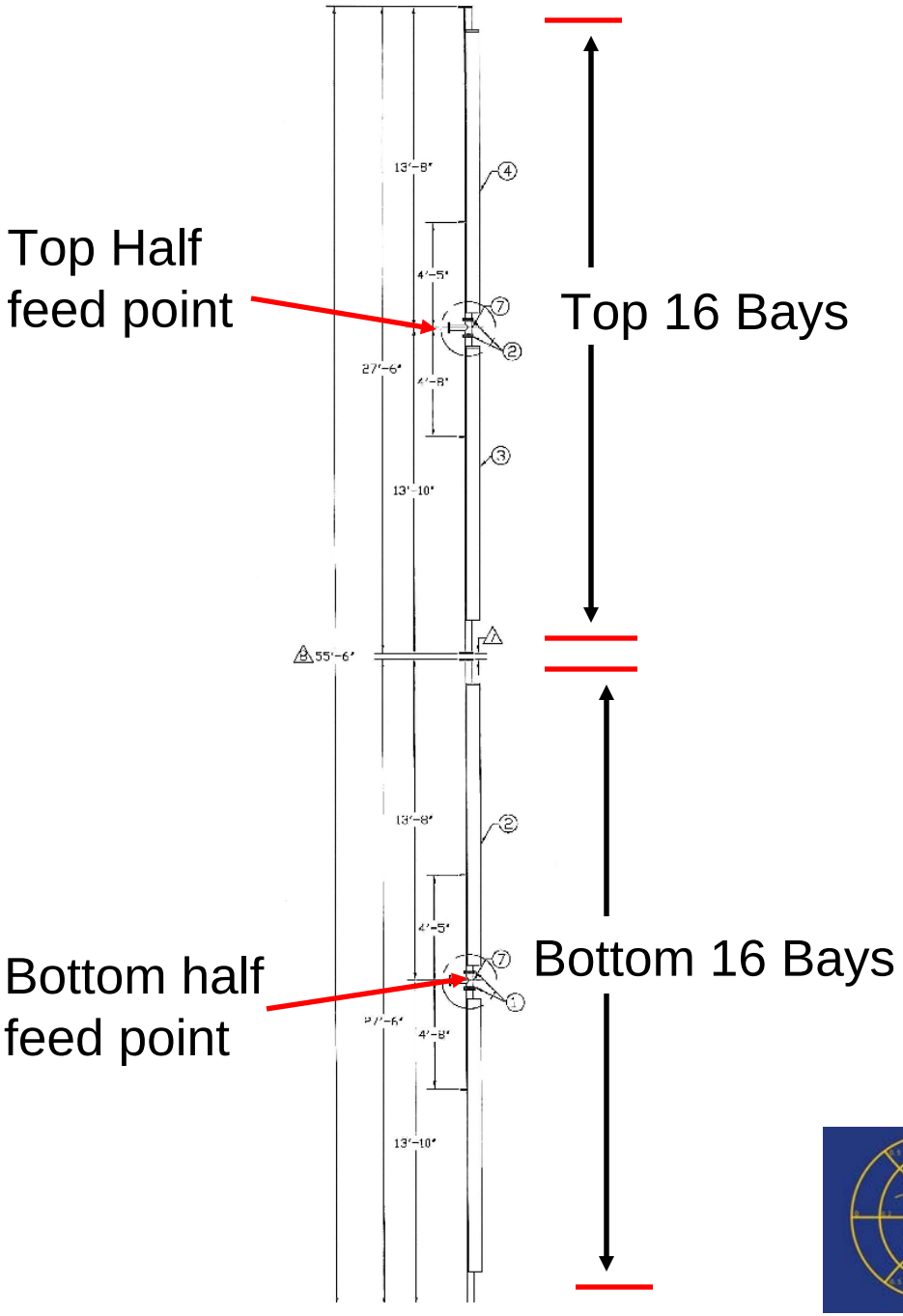

This is a drawing of a 32 bay, UHF dual fed antenna. The antenna uses two center fed 16 bay antennas stacked on top of each other. Even with the large size of the antenna, the V.S.W.R and group delay are very low over the channel. A power divider in the transmitter building feeds each half with identical power. In event of one half of the antenna failing, the other half is fed at full power. The ERP of the station drops by 3 dB. Isolation between the two antennas is 40 to 45 dB.

MICRONETIXX
COMMUNICATIONS

Here is a dual fed – top mount channel 7 slot antenna. The two four element sections form a center fed antenna. A power divider in the transmitter building feeds the two sections with equal power. Isolation between the two antenna sections is better than 60 dB. As a side benefit this is a low RFR antenna.

Feed points for both halves

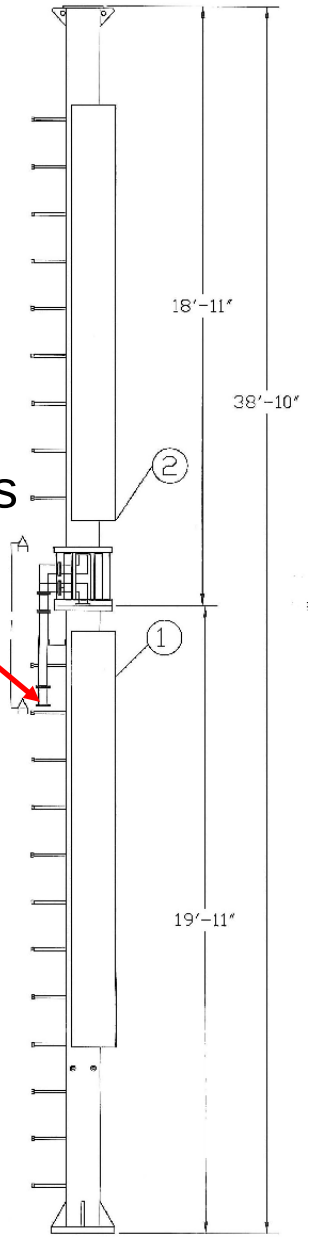

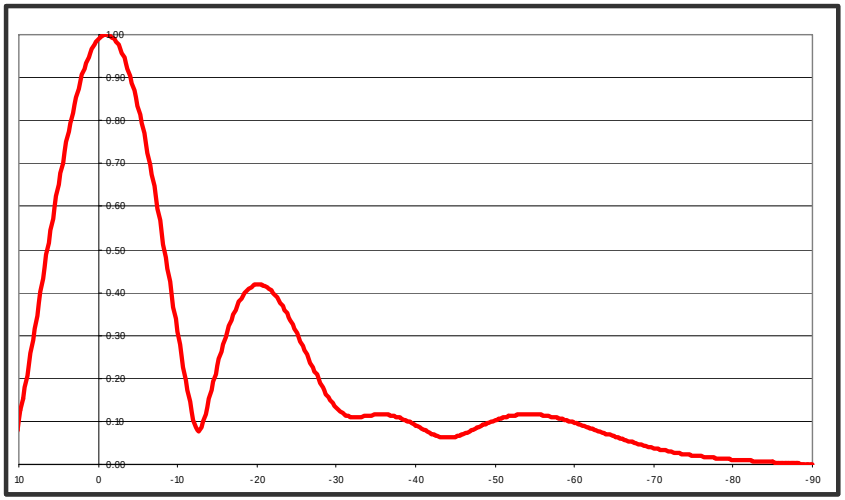

4 Bay Elevation pattern 10 to -90 degrees

MICRONETIXX COMMUNICATIONS

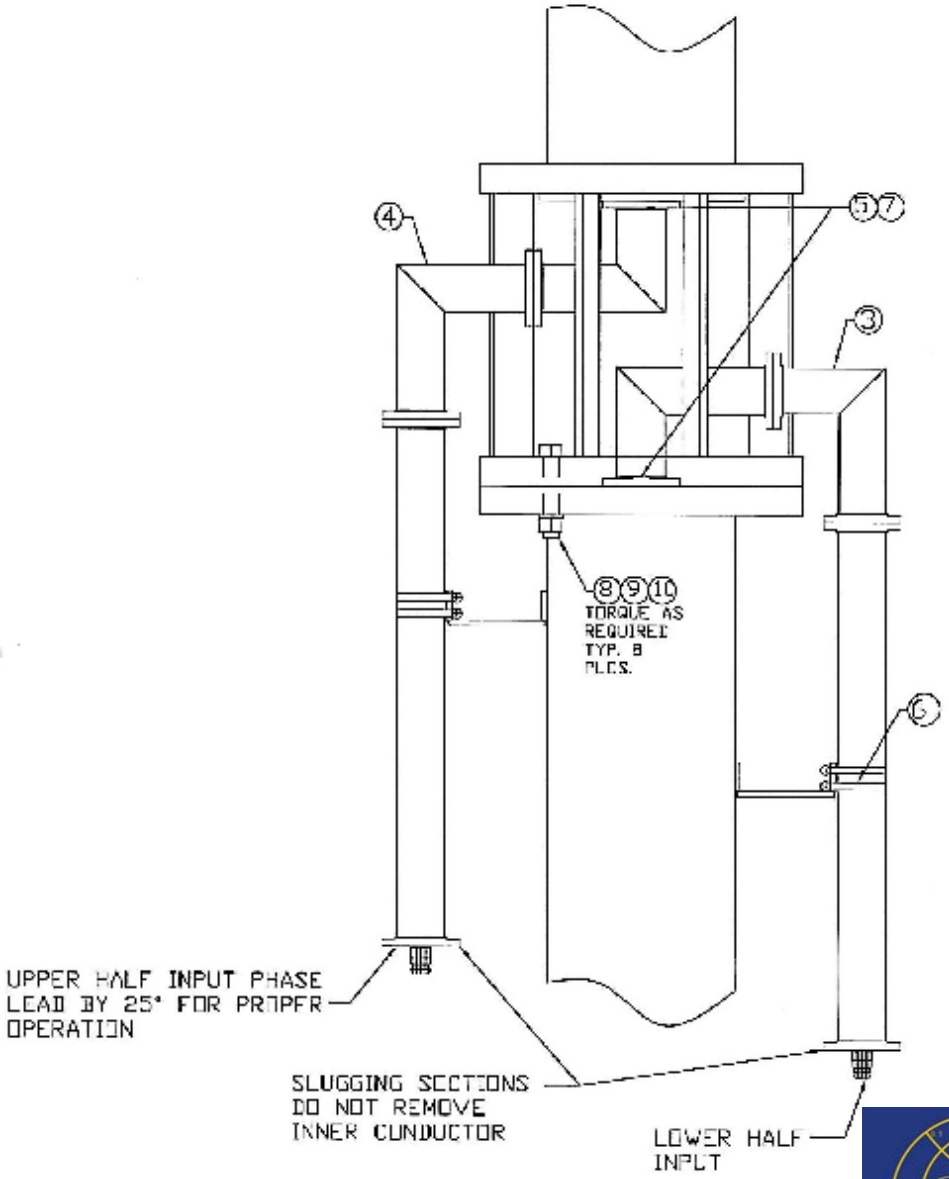

Here is a close up of the channel 7 feed points. To form the beam tilt, the feed line going to the top half is advanced by 25 electrical degrees. A wedding cake assembly allows access to the middle ends of the two antenna sections.

MICRONETIXX
COMMUNICATIONS

How to use a tree as a variable attenuator/polarizer and antenna fine matcher. Huh ?

The next slide shows how to turn an ordinary tree into a variable attenuator/polarizer and fine matcher. It’s easy and takes no special equipment or skills to do it.

MICRONETIXX COMMUNICATIONS

A tree directly in front of a C/P UHF slot antenna.

MICRONETIXX COMMUNICATIONS

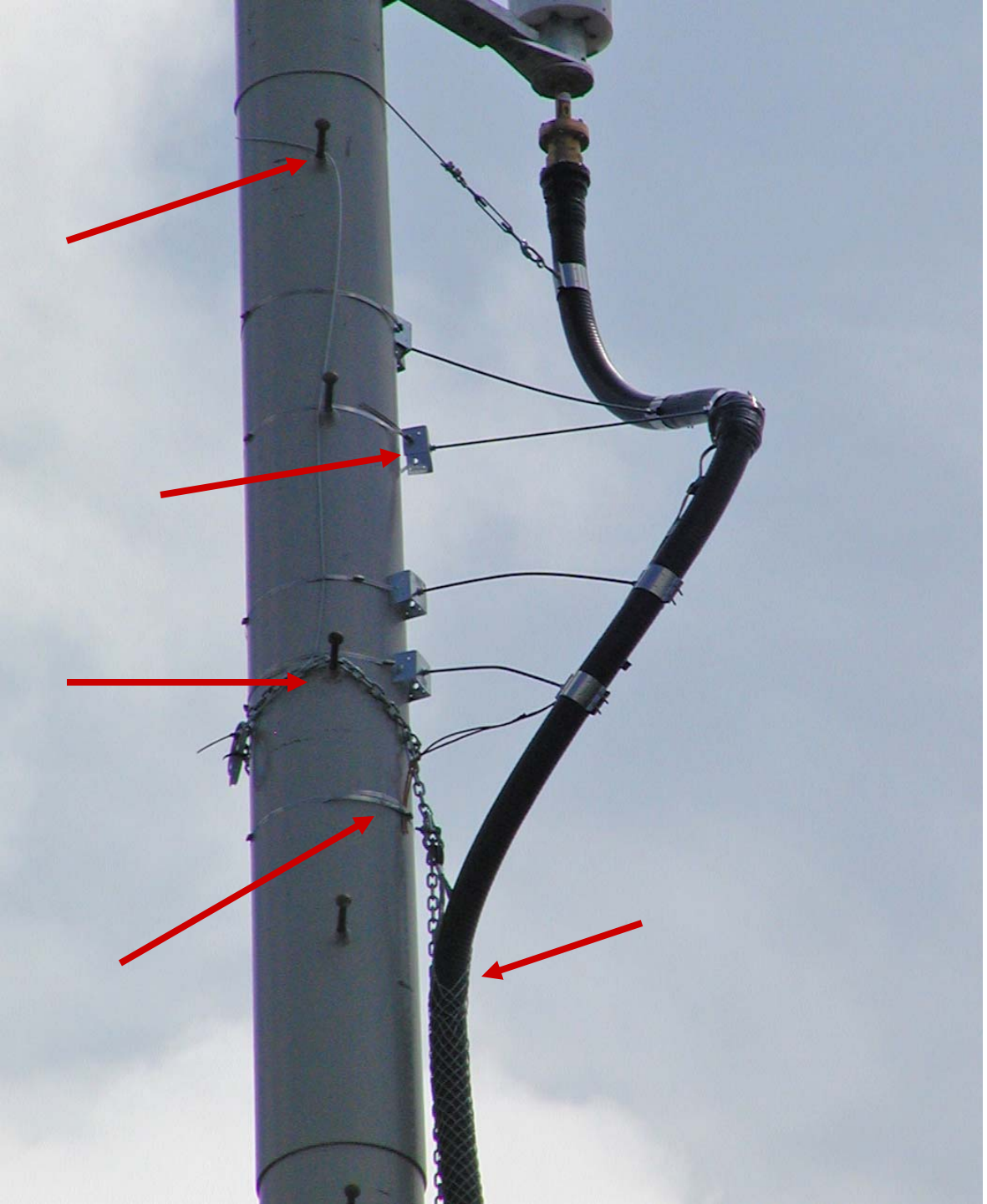

How NOT to install Air Flex transmission line. It looks like they ran out of threaded rod – so the top support is two turnbuckles in series. Below the hoisting grip the line is not supported for 15 feet. A chain supporting the grip is routed over a pair of climbing pegs. The monopole is painted and the grounding kit lead wire is not bonded to ground.

MICRONETIXX COMMUNICATIONS

Thank You !

Lewiston Maine – our hometown

Questions ?

Main Office: +(207) 786-2000

Email: info@micronetixx.com

Micronetixx Communications
70 Commercial Street
Lewiston, Maine 04240 USA
www.micronetixxantennas.com

MICRONETIXX
COMMUNICATIONS